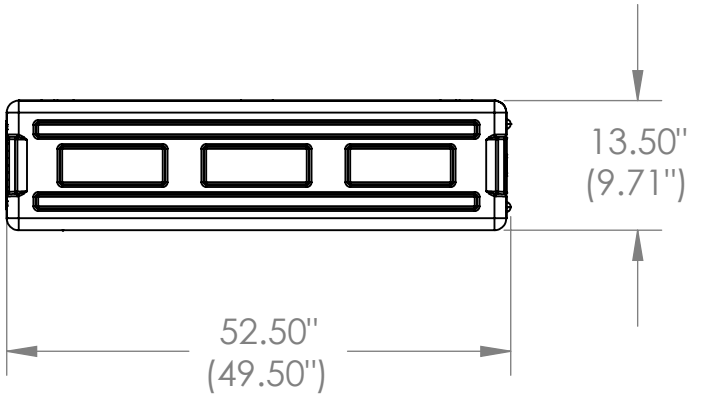

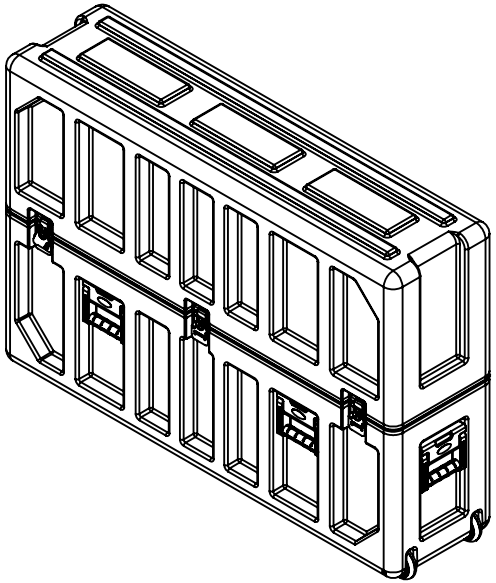

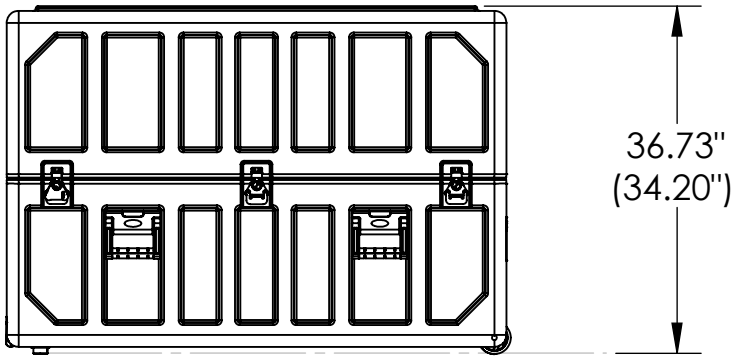

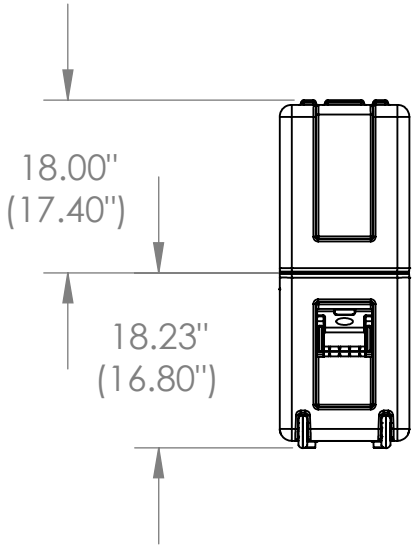

3SKB-4250

NOTE: DIMENSIONS IN (X.XX) ARE ID

434 West Levers Place
Orange, CA 92867
Phone: (714) 637-1252
Fax: (714) 637-0491
http://www.skbcases.com

Case Series:	Flat Screen Series	Dimensions (for reference only)			
Case part#	3SKB-4250		Length	Width	Overall	Base / Lid
			left to right	front to back	height	height
Weight:		Exterior	52.50"	13.50"	36.73"	18.23"-18.00"
		Inerior	49.50"	9.71"	34.20"	16.80"-17.40"

5 4 3 2 1